

XL6

SUZUKI

LIVE, DREAM AND THINK BIG WITH THE SUZUKI XL6

If you’re embracing life, make it an unforgettable adventure. If you’re chasing dreams, let them soar to new heights. When your thoughts take flight, there’s no limit to what you can achieve. Introducing the Suzuki XL6. Whether you’re embarking on thrilling adventures, pitching innovative ideas, exploring new avenues, or even tackling unexpected challenges, the XL6 empowers you to do it all in style.

Get ready to experience limitless possibilities - it all starts with the XL6.





WHERE INNOVATION MEETS PASSION

The XL6 captivates with its commanding presence and stylish interior, elevating your driving experience with class-leading features and specifications. The 7” touchscreen infotainment system is equipped with Apple CarPlay and Android Auto™, and includes Wireless CarPlay that is standard across the range. This, added to the keyless entry and push-button start, gives you a meticulously curated drive that delivers BIG moments.

NEW ERA OF AUTOMOTIVE EXCELLENCE

Step into a new era of automotive excellence with the all-new XL6. This remarkable vehicle not only showcases a harmonious fusion of innovation and elegance, but also exudes a stylish SUV appeal that turns heads on the road. Its striking appearance and impressive functionality creates a captivating experience that is bound to leave a lasting impression.



ENHANCING FUNCTIONALITY

Discover a realm of enhanced functionality within the XL6. LED lighting, from the illuminating headlamps to the distinctive taillamps, ensures heightened visibility and adds touch of class to your journey. You'll notice the protective front, rear and side skid plates, the wheel arch cladding, and the front fender garnish. these are distinctive Suzuki SUV design features, which help to ensure everyone inside is as safe as possible.



ELEVATING APPEARANCE

Elevate your presence on the road with the XL6's distinct appearance and superior ground clearance of 180mm. The bold front grille sets the scene for a commanding presence. Standard 15" polished alloy wheels not only add a touch of style but also contribute to the vehicle's exceptional performance. The XL6's design isn't just about turning heads; it's about making a bold statement that resonates. Every aspect of the XL6's appearance serves a purpose – enhancing both style and individuality, to empower your journeys with unparalleled distinction.



ELEVATE YOUR COMFORT

In the XL6, comfort reaches new heights with every detail designed to cater to your needs. The luxury of synthetic leather upholstery, an exquisite feature found in the GLX models, gracefully envelops you in a refined embrace. Your hands will delight in the touch of a leather-covered steering wheel, adding an extra layer of class to your driving experience. The GL models offer a comfortable cloth and leather combination upholstery. This thoughtful addition enhances your driving pleasure.

Enjoy a uninterrupted comfort with the XL6 and its spacious six-seater configuration. It offers auto climate control and a rear air conditioner, ensuring everyone stays comfortable throughout the ride. The inclusion of cruise control grants you the freedom to conquer the road effortlessly, enhancing your driving convenience. The XL6's second row seats boast individual armrests, giving each passenger a first-class journey, while the versatile third row seats provide ample space for friends and family. Thoughtful features like front cup holders and a 12v accessory socket ensure that the XL6 is meticulously designed to prioritise your comfort. With USB ports in all three rows, including fast-charging Type-C outlets in the second and third rows, everyone stays powered up and connected.



Front And Second Row Seats



Front Row Seats



Second And Third Row Seats

GO BIG WITH POWER AND EFFICIENCY

The XL6 is powered by a responsive 1.5litre 4-cylinder engine, engineered to deliver robust power and impressive fuel efficiency. This powerhouse stands strong with a peak power of 77kW and a maximum torque of 138Nm, ensuring a thrilling driving experience while maintaining exceptional efficiency. Additionally, boasting remarkable fuel consumption from just 6.0/100km, the XL6 proves itself as a true performer on the road.



5-speed Manual





4-speed Automatic



Your driving preference is catered for with two transmission options available: a 5-speed Manual transmission, and a 4-speed Automatic transmission. Whether you choose the manual or the automatic, the XL6 promises a refined journey, where every moment on the road showcases its exceptional performance.

This impressive powertrain is available in the MT GT, AT GL and the AT GLX derivatives, ensuring that you can customise your XL6 experience to match your exact needs.

What's also exciting is that all Automatic transmission models are equipped with hill-hold control as a standard feature, providing an added layer of convenience and safety when navigating challenging terrains.

BIG ON CARE AND SAFETY

Experience uncompromising care and safety with the XL6. Built on the Suzuki HEARTECT platform.

ABS
PRECISION BRAKING

Experience the security of precision braking with the XL6's Anti-lock Braking System. ABS prevents wheel lock-ups during sudden braking, ensuring you retain control and stability.

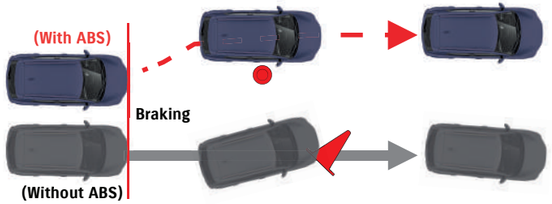

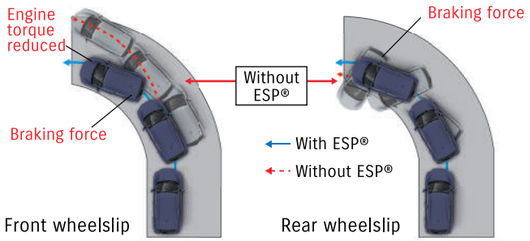

DRIVE CONFIDENTLY
WITH ESP

Equipped with Electronic Stability Program (ESP)***, the XL6 offers an extra layer of safety to ensure a confident and controlled driving experience. ESP constantly monitors your vehicle's movements and intervenes when necessary, helping you maintain stability during challenging driving conditions or sudden movements.

ISOFIX
CHILD SAFETY SIMPLIFIED

For your little ones, the XL6 integrates ISOFIX child seat anchorages, simplifying child safety. This hassle-free system ensures your little passengers ride securely, letting you focus on the journey ahead with peace of mind.





SAFETY BEYOND LIMITS

The XL6 takes safety to new heights, offering a reverse camera system with intelligent park assist.
This seamlessly-integrated feature provides a clear view of the area behind you, supported by real-time alerts from the parking sensors. Six airbags (dual front, side, and curtain) are standard across all models, ensuring that you and your passengers are well protected in any situation.

EBD
BALANCED BRAKING

Balance is key to safe braking, and the XL6's Electronic Brakeforce Distribution (EBD) ensures just that. EBD intelligently distributes braking force across the wheels, optimising stability under various load conditions.





CREATE A BIG PERSONALITY

The XL6 presents an array of accessories that empower you to personalise your vehicle to match your preferences.
With unparalleled flexibility, you can tailor the XL6 to embody your distinct style and personality. Enjoy the freedom to create a vehicle that's truly yours, as you embark on a journey that reflects your individuality. Embrace the convenience of modern technology as you make the XL6 unmistakably you.

MAJOR SPECIFICATIONS

Steering	RHD
Number of doors	5-door
Engine	Petrol
	1.5ℓ
Drive system	2WD

DIMENSIONS

Overall length (mm)		4 485
Overall width (mm)		1 775
Overall height (mm)		1 720
Wheelbase (mm)		2 740
Tread	Front (mm)	1 510
	Rear (mm)	1 520
Minimum turning radius (m)		5,2
Minimum ground clearance (mm)		180

CAPACITIES

Seating capacity		Persons	6
Fuel tank capacity		ℓ	45
Luggage capacity *1	Max volume	ℓ	693
	3rd Row seatback folded (VDA method) - when the luggage board is lowered down to the bottom.	ℓ	519
	3rd Row seatback raised (VDA method) - when the luggage board is used	ℓ	154

ENGINE

Type		K15B
Number of cylinders		4
Number of valves		16
Piston displacement	cm3	1 462
Bore x stroke	mm	74 x 85
Compression ratio		10.5
Maximum output	kW/rpm	77 / 6 000
Maximum torque	Nm/rpm	138 / 4 400
Fuel distribution		Multi-point injection

TRANSMISSION

Type		K15B	
		5MT	4AT
Gear ratio	1st	3,909	2,875
	2nd	2,043	1,568
	3rd	1,407	1,000
	4th	1,065	0,697
	5th	0,769	-
	Reverse	3,250	2,300
Final gear ratio		4,353	4,375

CHASSIS

Steering		Rack & Pinion
Brakes	Front	Ventilated disc
	Rear	Drum, leading & trailing
Suspension	Front	MacPherson strut with coil spring
	Rear	Torsion beam with coil spring
Tyres		185/65R15

WEIGHTS

Kerb weight (min./with full option)	kg	1, 185	1,195
Gross vehicle weight	kg	1,705	1,715

PERFORMANCE

Maximum speed (km/h)	170	165

MAJOR EQUIPMENT

Type	K15B
Drive system	2WD

GRADE		GL	GLX
TRANSMISSION		**5MT/4AT**	**4AT**
CHASSIS			
Tyres and wheels	185/65R15 + alloy wheels	◆	◆
Spare tyre and wheel	185/65R15 + steel wheel	◆	◆
EXTERIOR			
Front grille	Chrome	◆	◆
Tailgate garnish	Chrome	◆	◆
Blacked-out pillars	B+C pillar with gloss	◆	◆
Outside door handles	Chrome	◆	◆
Tailgate opener	Handle-operated	◆	◆
VISIBILITY			
Headlamps	LED	◆	◆
	Auto lighting	-	◆
Rear combination lamps	LED	◆	◆
Fog lamps	Front (LED)	◆	◆
Green-tinted windows		◆	◆
Rear window demister		◆	◆
Wipers	Front: 2 speeds (low, high) + intermittent + washer	◆	◆
	Rear: 1 speed + washer	◆	◆
Outside door mirrors	Black (only for two-tone)	-	◆
	Body coloured	◆	◆
	Electrical adjust	◆	◆
	Electrical fold	◆	◆
	Key synchronised auto folding mirrors	-	◆
	With built-in turn signal lamp	◆	◆

GRADE		GL	GLX
TRANSMISSION		**5MT/4AT**	**4AT**
STEERING AND INSTRUMENT PANEL			
3-spoke steering wheel	Urethane	◆	-
	Leather covered	-	◆
	With audio controls	◆	◆
	With cruise control	◆	◆
	Tilt & Telescopic	◆	◆
Power steering		◆	◆
Tachometer		◆	◆
Information display	4.2-inch colour LCD	◆	◆
	Clock	◆	◆
	Outside temperature	◆	◆
	Fuel consumption (instantaneous / average)	◆	◆
	Driving range	◆	◆
Light-on reminder		◆	◆
Driver's seatbelt reminder	Lamp & alarm	◆	◆
Passenger's seatbelt reminder	Lamp & alarm	◆	◆
Door ajar reminder		◆	◆
Low fuel warning		◆	◆
Instrument panel ornament	Black horizontal pattern	◆	◆
DRIVING AMENITIES			
Electric windows	Front & Rear	◆	◆
Electric window (driver's seat)	Automatic rise	◆	◆
	Auto down	◆	◆
Central door locking	Switch on driver's side	◆	◆
Remote-control door locks	With hazard lamp answer-back function	◆	◆
Keyless push start system		◆	◆
Air conditioner	Front automatic	◆	◆
	Rear manual	◆	◆
Pollen filter		◆	◆

MAJOR EQUIPMENT (CONTINUED)

GRADE		GL	GLX
TRANSMISSION		5MT/4AT	4AT
DRIVING AMENITIES (CONTINUED)			
Audio	Antenna (shark fin)	❖	❖
	Front speakers x 2	❖	❖
	Rear speakers x 2	❖	❖
	Front tweeters x 2	❖	❖
	7” Touchscreen radio with smartphone connectivity, Bluetooth®** and reverse camera	❖	❖
Cruise control		❖	❖
INTERIOR			
Cabin lights	Front cabin light (3-position) Overhead console with sunglass holder	❖	❖
	Centre cabin light (3-position)	❖	❖
Sun visors	With ticket holder (driver’s side)	❖	❖
	With vanity mirror (passenger’s side)	❖	❖
Assist grips	Passenger’s side	❖	❖
	2nd Row x 2	❖	❖
	3rd Row x 2	❖	❖
Cup holders	Front x 2	❖	❖
Bottle holders	Front x 2	❖	❖
	2nd Row x 2	❖	❖
	3rd Row x 2	❖	❖
Console box with armrest		❖	❖
Shift knob	Black with ornament	❖	❖
Parking brake release button	Chrome	❖	❖
USB port	Instrument panel	❖	❖
12v accessory socket	Instrument panel x 1	❖	❖
USB charger	2nd Row Type-C+C	❖	❖
	3rd Row Type-C+C	❖	❖
Foot rest	Driver’s side	❖	❖
Remote fuel lid opener		❖	❖
Inside door handles	Chrome	❖	❖

GRADE		GL	GLX
TRANSMISSION		5MT/4AT	4AT
SEATS			
Front seats	Seat height adjuster (driver’s side)	❖	❖
	Slide and recline function (both sides)	❖	❖
	Head restraint x 2 (separate type)	❖	❖
	Seatback pocket (driver’s side)	❖	❖
	Seatback pocket (passenger’s side)	❖	❖
2nd-row seats	Head restraint x 2 (separate type)	❖	❖
	Slide and recline function	❖	❖
	Captain seat	❖	❖
2nd-row armrest	Foldable type	❖	❖
3rd-row seats	Head restraint x 2 (separate type)	❖	❖
	50/50-split tilt down-folding	❖	❖
Seat upholstery material	Fabric	❖	-
	Synthetic leather	-	❖
LUGGAGE AREA			
Luggage board	50:50-split	❖	❖
SAFETY, SECURITY, AND ENVIRONMENTAL COMPATIBILITY			
SRS front dual airbags		❖	❖
SRS side airbags		❖	❖
SRS curtain airbags		❖	❖
Seatbelts	Front: 3-point ELR seatbelts with pre-tensioners, force limiters & height adjusters	❖	❖
	2nd Row: 3-point ELR seatbelts	❖	❖
	3rd Row: 3-point ELR seatbelts x 2	❖	❖
ISOFIX child seat anchorages	x 2	❖	❖
Child seat tether anchorages	x 2	❖	❖
Childproof rear door locks		❖	❖
Side impact door beams		❖	❖
ABS with EBD function		❖	❖
ESP®**		❖	❖
Hill hold control		❖ (AT)	❖ (AT)

MAJOR EQUIPMENT (CONTINUED)

GRADE		GL	GLX
TRANSMISSION		5MT/4AT	4AT

SAFETY, SECURITY, AND ENVIRONMENTAL COMPATIBILITY (CONTINUED)

AT shift lock / key interlock		❖	❖
High-mount stop lamp	LED	❖	❖
Immobiliser		❖	❖
Rear Parking Sensors	4 Sensors	❖	❖
Security alarm		❖	❖

❖: Standard –: Not available

** Bluetooth is a registered trademark of Bluetooth SIG, Inc.

*** ESP is a registered trademark of Daimler AG.

The ESP is designed to help keep the XL6 under control. However, its effectiveness depends on driving conditions and the state of the road surface. If the tyres exceed their grip limit and the wheels start to spin or skid, it may not be fully effective.

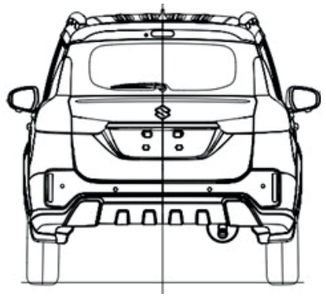

1775

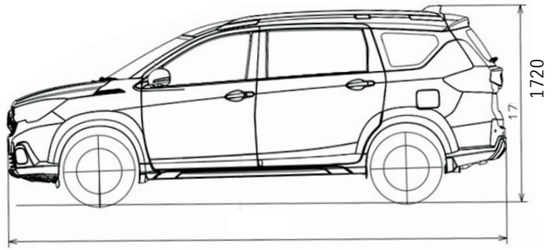

4485

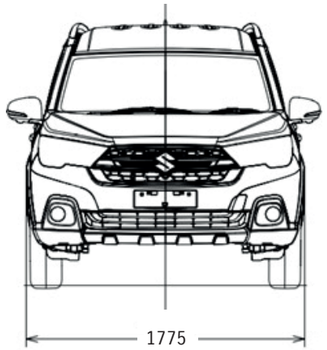

1775




XL6
THINK BIG
XL6

ACCESSORIES

1 | Door Visor

Stainless steel insert
Part No. 990J0M72SQ0-020

2 | Rear Upper Spoiler

Celestial Blue
Part No. 990J0M72R07-190

Splendid Silver
Part No. 990J0M72R07-220

Grandeur Grey
Part No. 990J0M72R07-200

Arctic White Pearl
Part No. 990J0M72R07-130

Opulent Red
Part No. 990J0M72R07-350

Primed
Part No. 990J0M72R07-090

3 | Tow Bar

Part No. 72901-51U00-000









COLOURS

SINGLE TONE


Arctic White Pearl


Splendid Silver Pearl Metallic


Celestial Blue Pearl Metallic


Grandeur Grey Pearl Metallic


Opulent Red Pearl Metallic

TWO-TONE (GLX)


Opulent Red Pearl Metallic
x Bluish Black Pearl


Splendid Silver Pearl Metallic
x Bluish Black Pearl



SUZUKI COMPLETE

Suzuki understands that purchasing a new vehicle is a substantial investment. Our unwavering commitment to customer satisfaction is represented in our ‘Suzuki Complete’ package, which includes every aspect of after-sales support, with warranty, service plan, and roadside assistance standard.

Warranty

All Suzuki models are covered by a comprehensive promotional warranty against any defects for a period of 5 year/200 000km. This is supported by a six-year body corrosion warranty subject to terms and conditions.

Service Plan

The XL6 benefits from a 4 year/60 000km service plan. This plan includes the replacement of oil, the oil filter, fuel filter, brake fluid, air filter and accessory belts, but excludes tyres, brakes and other wear-and-tear items.

Service Intervals

15 000 km or one year, whichever comes first.

Roadside Assistance

Every new XL6 comes with a five-year roadside assistance plan. Some of the benefits offered by this comprehensive package include: battery and locksmith call-out services, mechanical and electrical, breakdown towing (accident towing is optional), emergency medical rescue, vehicle repatriation and a stand-by-you roadside security armed-response service.

All care is taken to ensure the accuracy of this brochure at the time of print approval. Specifications, features, prices and model availability may vary from those specified and may change without notice. Always consult your authorised Suzuki Dealer or refer to www.SuzukiAuto.co.za for the latest details on all models. SUZUKI AUTO South Africa (PTY) Ltd will not be held liable for any loss as a result of reliance on the content of this brochure, whether in negligence or otherwise. Vehicles are shown for illustrative purposes only and may not depict exact specifications. Published September 2026.



SUZUKI

SUZUKI AUTO SOUTH AFRICA (PTY) LTD | Tel: 0861 511 111
Warehouse 1, Longlake Logistics Park, 1 Ashworth Street, Johannesburg
www.SuzukiAuto.co.za

Part number 9900L-51U00-ZFL





